# MODULAR
SHELVING SYSTEM

secabo

Abb. ähnlich

secabo

**Shelving table 32**
Work table 32 (140 cm x 77cm x 90cm)

# secabo QUICK GUIDE

**Secabo Modulares Shelving System • *Secabo Modular Shelving System***

## Shelving table 32

Work table 32 (140 cm x 77cm x 90cm)

**Art.Nr.: 183.000.01**

**Shelving Table 32**

Optimum use of space with the well thought-out Shelving Table 32: Up to 32 rolls of film can be stored gently and scratch-free and, depending on the size, plotter and / or heat press find their place on the tabletop.

**Technical data**

| | |
|---|---|
| Brand: | Secabo |
| Size of work surface: | 140 x 77 cm |
| Dimensions LxWxH : | 140 x 77 x 90 cm |
| Weight: | 55 kg |
| Load limit: | 90 kg (on the worktop) |

**Secabo Modular Shelving System**
**As individual as your requirements.**

The needs of daily work are as individual as the person doing it. We at Secabo have long recognised this and with the Secabo Modular Shelving System we now offer the optimum solution for the individual construction of your personal working environment.

From shelves and racks for storing rolls of film to tables for transfer presses and cutting plotters - the modular system offers unlimited possibilities! Optionally, a roll holder can also be attached to make working with the cutting plotter even easier. In addition to various sizes, the high-quality modules are available as stand-alone models, rollable or for wall mounting.

(Mehrfachsteckdose auf der Abbildung ist kein Bestandteil des Systems, dient nur als Beispiel)
(Multiple socket on the picture is not part of the system, serves only as an example)

# secabo QUICK GUIDE

## Secabo Modulares Shelving System • *Secabo Modular Shelving System*

### Overview of individual parts and article numbers

## Shelving table 32

Work table 32 (140 cm x 77cm x 90cm)

**This product consists of 4 packaging units and is delivered in 5 packages.**

| | | |
|---|---|---|
| 1 | Packaging Unit Work & Storage Area Secabo Shelving Table 32s with packaging | 183.10035.00 |
| 2 | Packing unit frame and small parts Secabo shelving table 32 | 183.20003.00 |
| 3 | Packaging unit secabo shelving module with packaging | 183.10022.00 |
| 4 | Packaging unit placement tubes Secabo module 32 | 183.20004.00 |

SCAN ME

Hier haben wir das ganze Handling vom Auspacken bis zum Aufbau für Sie noch als Video visualisiert. Falls Sie noch Fragen haben, melden Sie sich jederzeit gerne per E-Mail an mail@secabo.com.

Here we have visualised the entire handling from unpacking to assembly for you as a video. If you have any questions, please do not hesitate to contact us by e-mail at mail@secabo.com.

| Item | Qty. | Description-EN | Secabo PN |
|---|---|---|---|
| **1** | **1** | **Packaging Unit Work & Storage Area Secabo Shelving Table 32s with packaging** | **183.10035.00** |
| 1.1 | 1 | Work surface Secabo Shelving Table 32s | 990.183.032.01 |
| 1.2 | 1 | Storage area Secabo Shelving Table 32s | 990.183.033.01 |
| **2** | **1** | **Packing unit frame and small parts Secabo shelving table 32** | **183.20003.00** |
| 2.1 | 1 | Packaging unit vertical connector 90° with packaging | 183.10003.00 |
| 2.1.1 | 8 | Vertical connector 90° | 990.183.024.01 |
| 2.2 | 1 | Packaging Unit Secabo Shelving Module Connector | 183.10041.00 |
| 2.2.1 | 1 | Secabo Shelving Module Connector | 990.183.037.01 |
| 2.3 | 3 | Packaging unit pipe set 625 mm with packaging | 183.10007.00 |
| 2.3.1 | 2 | 28s Pipe-625 mm | 990.183.006.01 |
| 2.4 | 5 | Packaging unit pipe holder with packaging | 183.10011.00 |
| 2.4.1 | 4 | Pipe holder clamp | 990.183.018.01 |
| 2.5 | 1 | Packaging unit pipe set 780 mm with packaging | 183.10009.00 |
| 2.5.1 | 4 | 28s Pipe-780 mm | 990.183.009.01 |
| 2.6 | 5 | Packaging unit pan head screw 4.5 x 13mm RW20 with packaging | 183.10013.00 |
| 2.6.1 | 8 | Pan head screw 4.5 x 13mm RW20 | 990.183.026.01 |
| 2.7 | 1 | Packaging unit rotatable angle connector with packaging | 183.10051.00 |
| 2.7.1 | 4 | Rotatable angle connector | 990.183.049.01 |
| 2.8 | 1 | Packaging Unit Vertical Strut with Packaging | 183.10067.00 |
| 2.8.1 | 5 | Double T-Connector | 990.183.063.01 |
| 2.8.2 | 2 | 28s Pipe-780 mm | 990.183.009.01 |
| 2.9 | 1 | Packaging Unit Pipe Set 565 mm with Packaging | 183.10068.00 |
| 2.9.1 | 10 | 28s Pipe-565 mm | 990.183.065.01 |
| 2.10 | 1 | Packaging unit t-connector with packaging | 183.10005.00 |
| 2.10.1 | 2 | T-connector | 990.183.008.01 |
| 2.11 | 5 | Packaging unit swivel castor with brake 100mm with packaging | 183.10020.00 |
| 2.11.1 | 1 | Swivel castor with brake 100mm | 990.183.022.01 |
| 2.11.2 | 4 | Washer M5 | 990.183.062.01 |
| 2.12 | 1 | Packaging Unit Screwdriver | 183.10069.00 |
| 2.12.1 | 1 | Bit Handle for 1/4" Bit | 990.183.082.01 |
| 2.12.2 | 1 | 4mm HSH Bit 1/4" | 990.183.083.01 |
| 2.12.3 | 1 | RW 20 (ASSY) Bit 1/4" | 990.183.084.01 |
| 2.12.4 | 1 | 5mm HSH Bit 1/4" | 990.183.108.01 |
| **3** | **2** | **Packaging unit secabo shelving module with packaging** | **183.10022.00** |
| 3.1 | 1 | Secabo Shelving Module | 990.183.0023 |
| 3.1.1 | 2 | Secabo Shelving Modul Board | 990.183.011.01 |
| 3.1.2 | 16 | Adjusting ring DIN 705 OD 45 ID 28 T16 mm | 990.183.012.01 |
| 3.1.3 | 9 | Spacer Stud II M6x12 | 990.183.013.01 |
| 3.1.4 | 18 | Screw HSBH M6x20 | 990.183.014.01 |
| 3.1.5 | 16 | Headless Screw ISO 4029 M8x8 | 990.183.015.01 |
| **4** | **1** | **Packaging unit placement tubes Secabo module 32** | **183.20004.00** |
| 4.1 | 8 | Packaging unit pipe set 625 mm with packaging | 183.10007.00 |
| 4.1.1 | 2 | 28s Pipe-625 mm | 990.183.006.01 |
| 4.2 | 8 | Packaging unit pipe cap 28s diameter with packaging | 183.10053.00 |
| 4.2.1 | 4 | Pipe cap 28s diameter | 990.183.028.01 |

# secabo QUICK GUIDE

**Secabo Modulares Shelving System** • ***Secabo Modular Shelving System***

## Shelving table 32

Work table 32 (140 cm x 77cm x 90cm)

**Art.Nr.: 183.000.01**

1

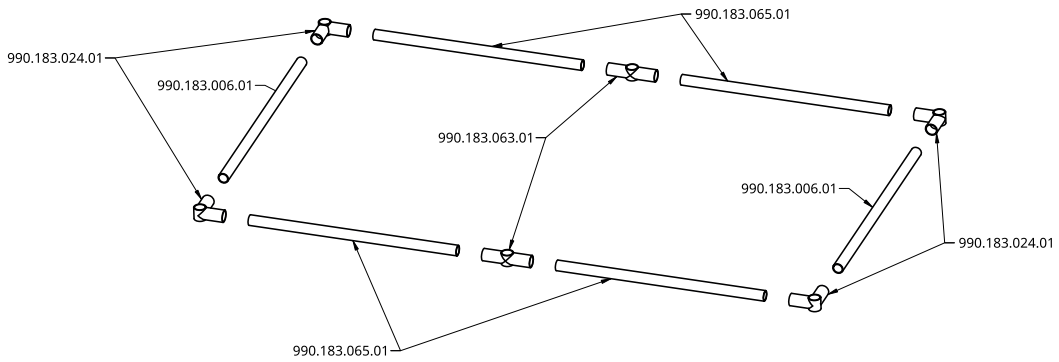


Der Einfachheit halber kann dieser Schritt auf der Ablagefläche mit der Artikelnummer 990.183.003.01 durchgeführt werden.
For simplicity, this step can be carried out on the storage area plate with item number 990.183.003.01.

2

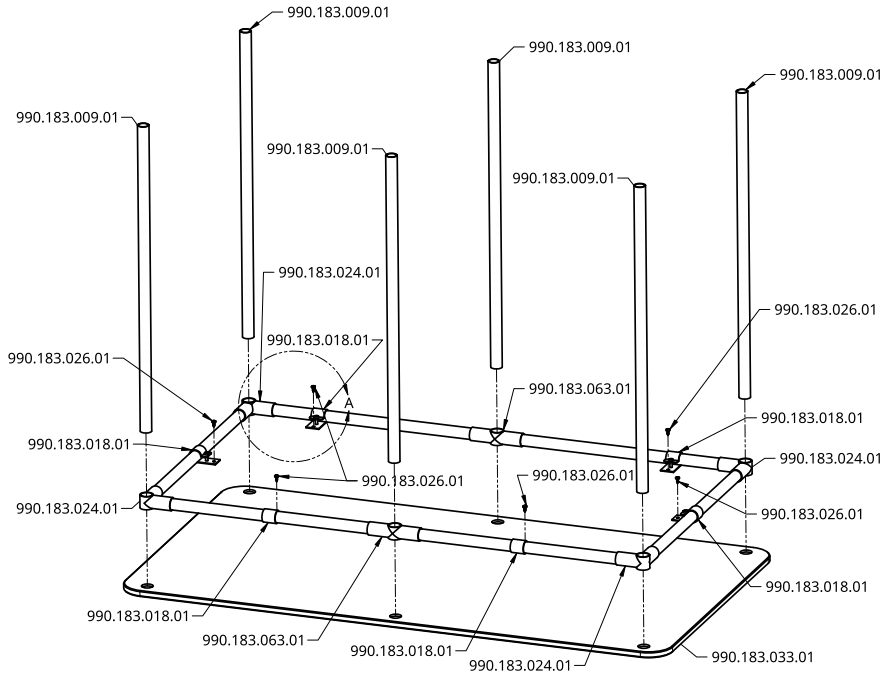


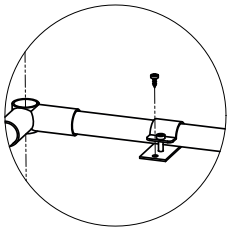

Platzieren Sie die Rohrhalterungen (990.183.018.01) auf der Rückseite nicht in der Mitte, sondern näher an der Ecke wie hier gezeigt!
Place the pipe holder clamp (990.183.018.01) on the back not in the middle, but closer to the corner as shown here!

Hier haben wir das ganze Handling vom Auspacken bis zum Aufbau für Sie noch als Video visualisiert.
Falls Sie noch Fragen haben, melden Sie sich jederzeit gerne per E-Mail an mail@secabo.com.

Here we have visualised the entire handling from unpacking to assembly for you as a video.
If you have any questions, please do not hesitate to contact us by e-mail at mail@secabo.com.

# secabo QUICK GUIDE

Secabo Modulares Shelving System • *Secabo Modular Shelving System*

## Shelving table 32

Work table 32 (140 cm x 77cm x 90cm)

**Art.Nr.: 183.000.01**

3

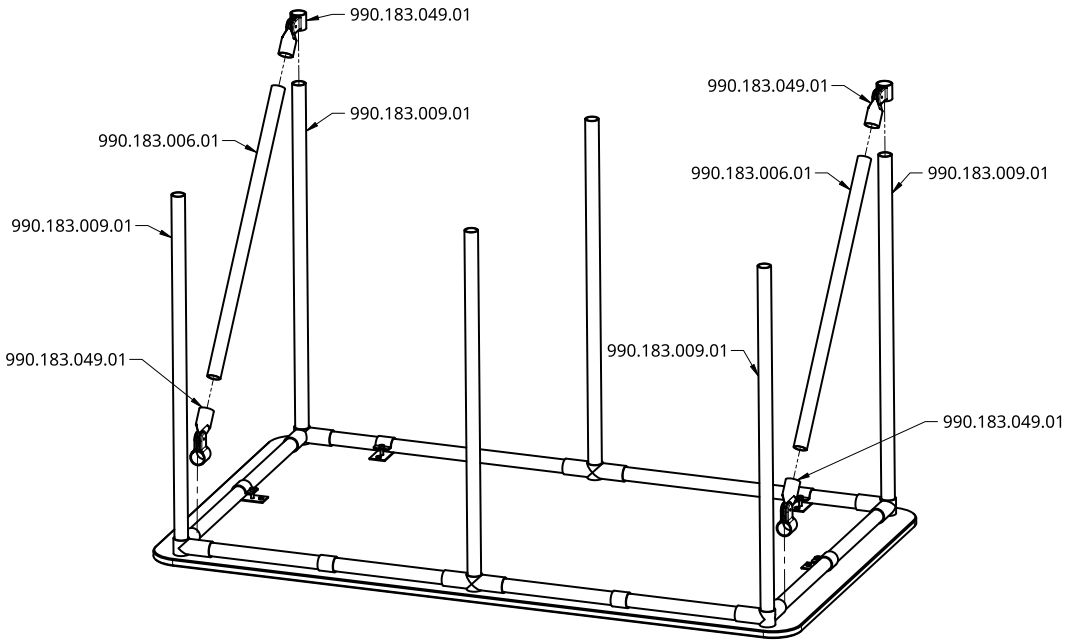


4

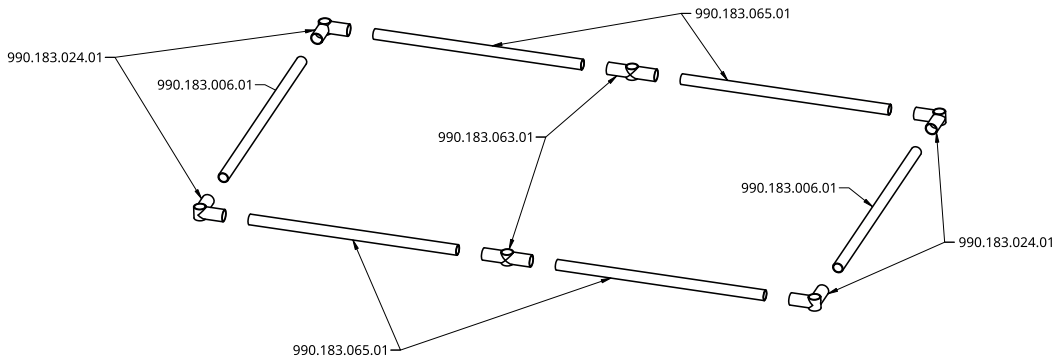


Hier haben wir das ganze Handling vom Auspacken bis zum Aufbau für Sie noch als Video visualisiert.
Falls Sie noch Fragen haben, melden Sie sich jederzeit gerne per E-Mail an mail@secabo.com.

Here we have visualised the entire handling from unpacking to assembly for you as a video.
If you have any questions, please do not hesitate to contact us by e-mail at mail@secabo.com.

# secabo QUICK GUIDE

**Secabo Modulares Shelving System** • ***Secabo Modular Shelving System***

## Shelving table 32

Work table 32 (140 cm x 77cm x 90cm)

**Art.Nr.: 183.000.01**

5

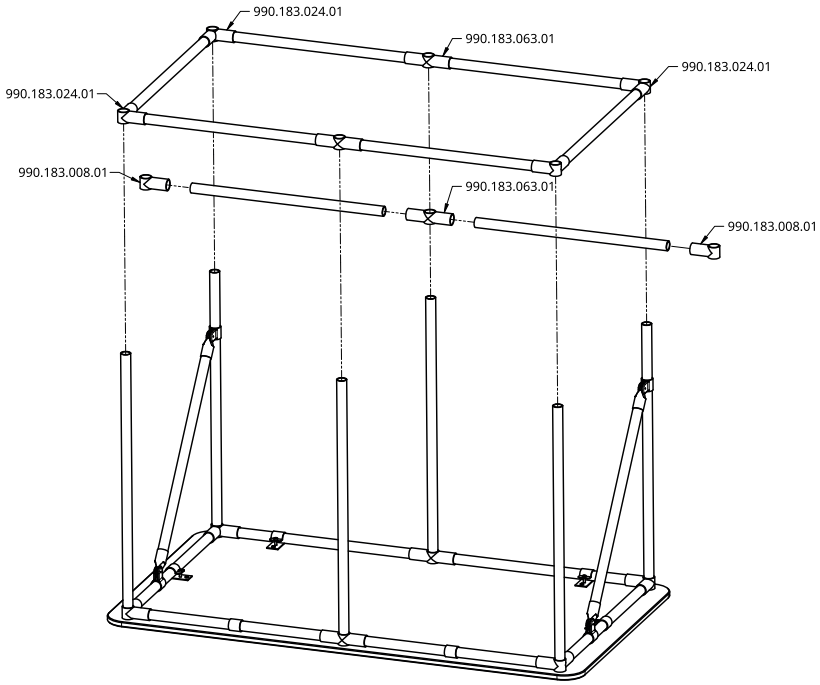


6

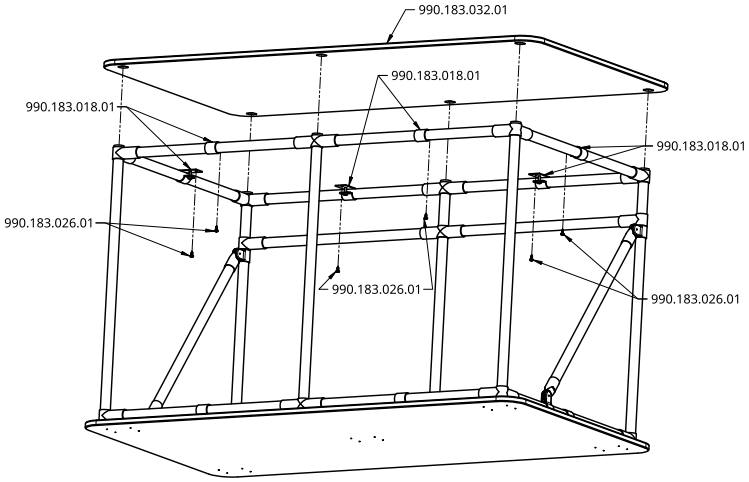


Hier haben wir das ganze Handling vom Auspacken bis zum Aufbau für Sie noch als Video visualisiert.
Falls Sie noch Fragen haben, melden Sie sich jederzeit gerne per E-Mail an mail@secabo.com.

Here we have visualised the entire handling from unpacking to assembly for you as a video.
If you have any questions, please do not hesitate to contact us by e-mail at mail@secabo.com.

## Shelving table 32

Work table 32 (140 cm x 77cm x 90cm)

**Art.Nr.: 183.000.01**

7

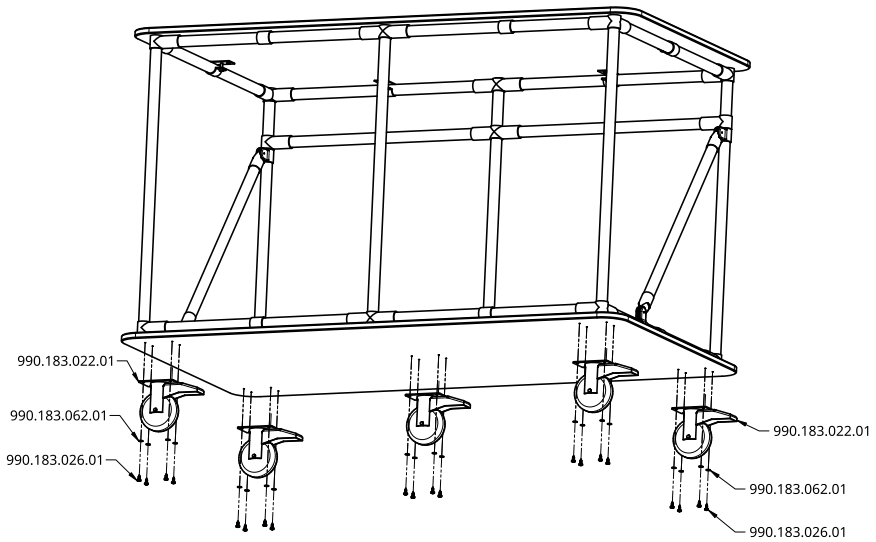


**Bitte benutzen Sie beim Arbeiten die Bremse der Lenkrollen.**
**Please use the brake on the castors when working.**

Hier haben wir das ganze Handling vom Auspacken bis zum Aufbau für Sie noch als Video visualisiert.
Falls Sie noch Fragen haben, melden Sie sich jederzeit gerne per E-Mail an mail@secabo.com.

Here we have visualised the entire handling from unpacking to assembly for you as a video.
If you have any questions, please do not hesitate to contact us by e-mail at mail@secabo.com.

## Shelving table 32

Work table 32 (140 cm x 77cm x 90cm)

**Art.Nr.: 183.000.01**

8

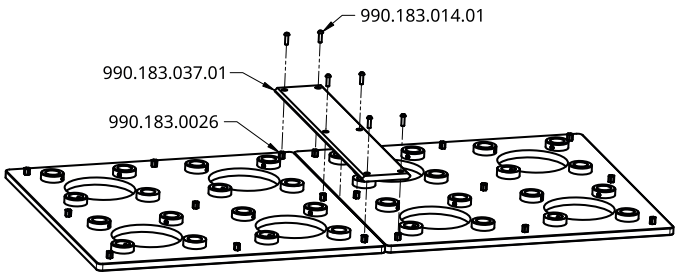


9

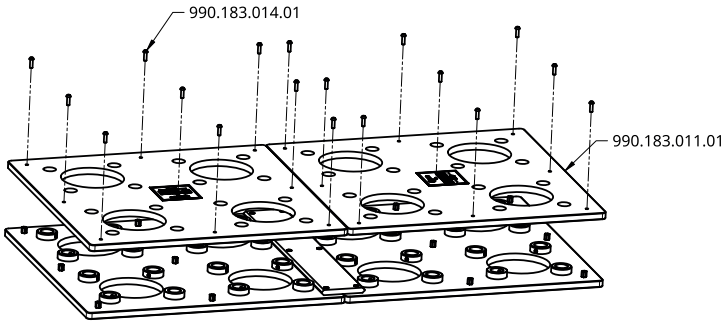


Die beiden Secabo Shelving Module 990.183.0023 nebeneinander platzieren und aufschrauben.
Das Secabo Shelving Module Connector 990.183.037.01 wie bei Schritt 8 platzieren.

Place the two Secabo Shelving Modules 990.183.0023 next to each other and screw them on.
Place the Secabo Shelving Module Connector 990.183.037.01 as in step 8.

10

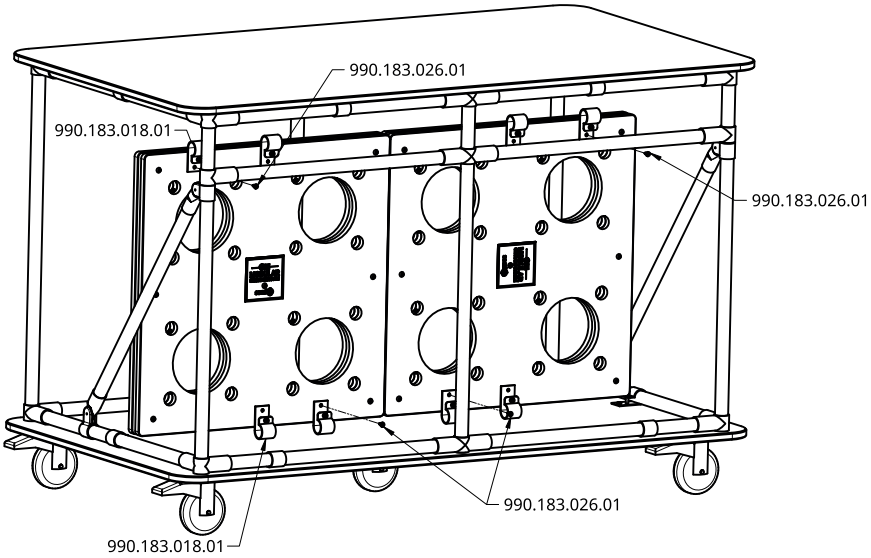


Hier haben wir das ganze Handling vom Auspacken bis zum Aufbau für Sie noch als Video visualisiert.
Falls Sie noch Fragen haben, melden Sie sich jederzeit gerne per E-Mail an mail@secabo.com.

Here we have visualised the entire handling from unpacking to assembly for you as a video.
If you have any questions, please do not hesitate to contact us by e-mail at mail@secabo.com.

# secabo QUICK GUIDE

Secabo Modulares Shelving System • *Secabo Modular Shelving System*

## Drawer Shelving System

Work table 32 (140 cm x 77cm x 90cm)

**Art.Nr.: 183.000.09**

1

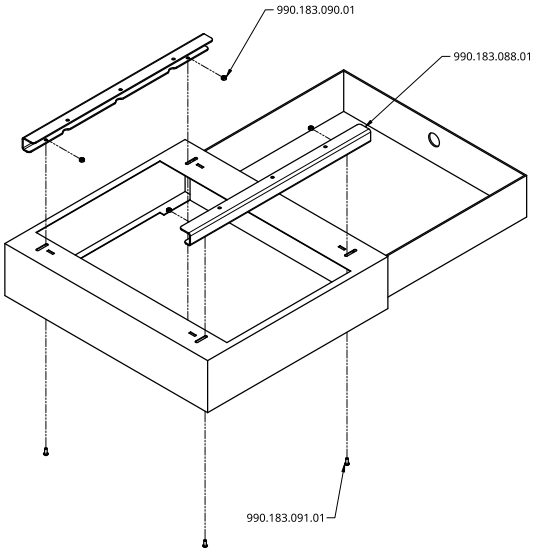


| Anz. | Description-EN | Secabo PN |
|---|---|---|
| 2 | Mounting Bracket Drawer | 990.183.088.01 |
| 4 | Nut HN M4 | 990.183.090.01 |
| 4 | Screw HSBH M4x10 | 990.183.091.01 |
| 1 | Bit Handle for 1/4" Bit | 990.183.082.01 |
| 1 | 4mm HSH Bit 1/4" | 990.183.083.01 |

Max. Beladung der Schublade 15 kg!
Max. load for the drawer 15kg!

2

Schublade mittig ausrichten!
Align drawer centrally!

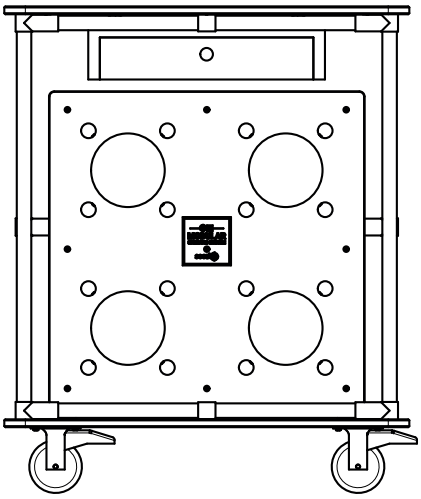

3

Vordere Stange als Anschlag für die Schublade verwenden!
Use the front rod as a stop for the drawer!

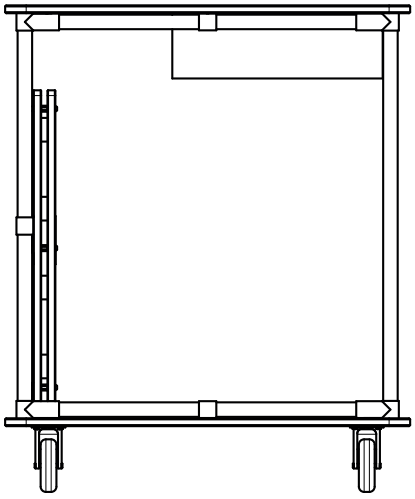

Hier haben wir das ganze Handling vom Auspacken bis zum Aufbau für Sie noch als Video visualisiert.
Falls Sie noch Fragen haben, melden Sie sich jederzeit gerne per E-Mail an mail@secabo.com.

Here we have visualised the entire handling from unpacking to assembly for you as a video.
If you have any questions, please do not hesitate to contact us by e-mail at mail@secabo.com.

# secabo QUICK GUIDE

**Secabo Modulares Shelving System** • ***Secabo Modular Shelving System***

## Shelving table 32

Work table 32 (140 cm x 77cm x 90cm)

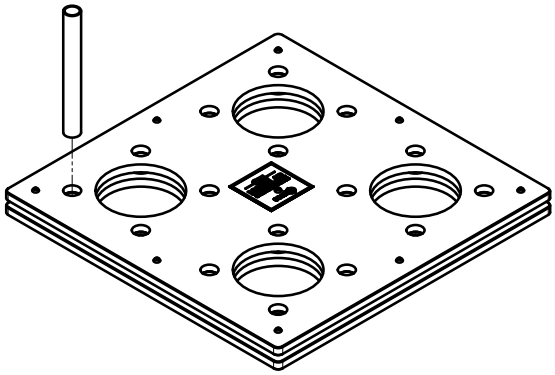

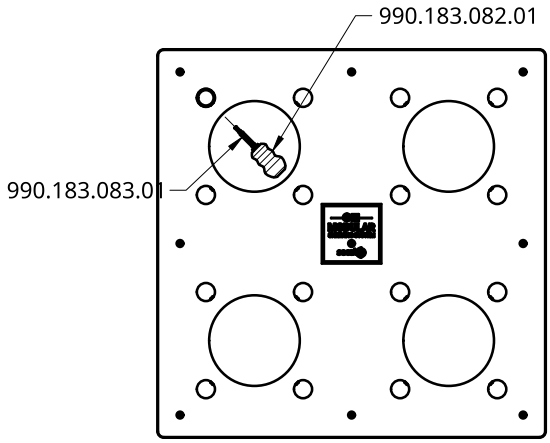


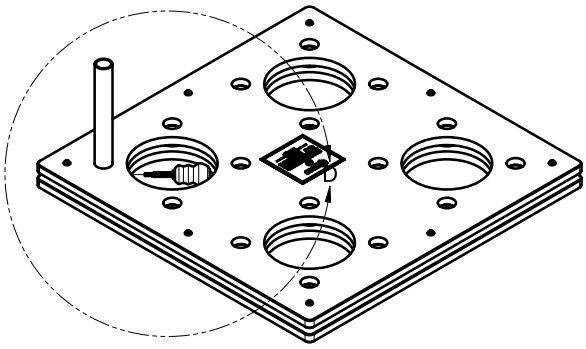


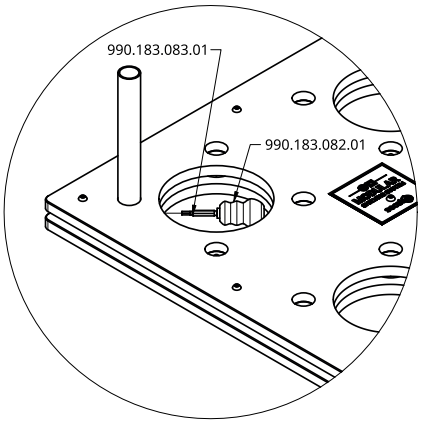


D
1:5

Hier haben wir das ganze Handling vom Auspacken bis zum Aufbau für Sie noch als Video visualisiert.
Falls Sie noch Fragen haben, melden Sie sich jederzeit gerne per E-Mail an mail@secabo.com.

Here we have visualised the entire handling from unpacking to assembly for you as a video.
If you have any questions, please do not hesitate to contact us by e-mail at mail@secabo.com.